MAGNETIC SCREW PLUG

36L.A

Magnetic drain for high temperature with alnico plug base on DIN 910 made of zinc plated steel

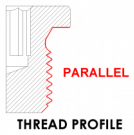

BODY MATERIAL White Zinc-plated Steel
(1) PERMANENT MAGNET AlNiCo
RANGE TEMPERATURE -10 + 500 [°C]; +14 + 932 [F]

DESCRIPTION

Magnetic screw plug based on a DIN 910 made of zinc plated steel.The permanent magnet attracts and holds abrasive, ferrous metal particles preventing their circulation through the lubrication or hydraulic system. The magnetic filter plug is reccommended for any application in bath of oil. This model has a alnico magnet which is the cheaper solution to withstand high temperature.

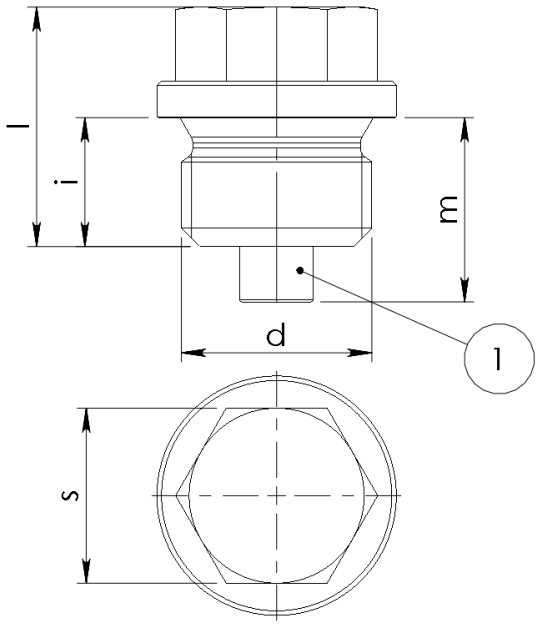

Article	d	i[mm]	s[mm]	l[mm]	m[mm]	weight[g]
110200073	G1/4	12	13	27	18	25
110200074	G 3/8	12	17	27	18	40
110200075	G 1/2	14	19	32	20	72
110200076	G 3/4	16	24	32	22	113
110200077	G 1	16	27	38	22	202,5
110200085	M10X1	8	10	23	14	12,5
110200090	M12X1,5	12	13	21	18	22
110200078	M14X1,5	12	13	27	18	27
110200079	M16X1,5	12	17	27	18	51
110200080	M18X1,5	12	17	30	18	52
110200081	M20X1,5	14	19	32	20	68,5
110200082	M22X1,5	14	19	32	20	78
110200083	M24X1,5	14	22	33	20	98
110200084	M26X1,5	16	24	36	22	127,5

Athena S.p.A. reserves the right to change dimensions listed on out technical tables, without notice