30B

Breather plug free flow version made of brass

BODY MATERIAL Brass
(1) PROTECTION CAP White Zinc-plated Steel

DESCRIPTION

The breather plug is designed to mantain at atmospheric pressure a unit even when it is under sudden chagnes in ambient temperature.This model is not filtered and permits a free flow of air.The cap protects from foreign bodies which may enter into the mechanical equipment and may cause damages.

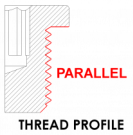

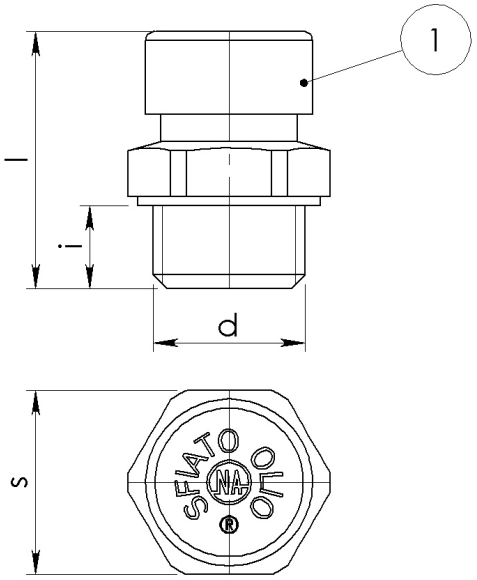

Article	d	i[mm]	s[mm]	l[mm]	weight[g]
130100018	G1/8	7	14	22	11
130100019	G1/4	9	17	30	26
130100023	G 3/8	9	20	28	32
130100025	R 3/8	10	19	27	31
130100027	G 1/2	10	24	29	52
130100029	R 1/2	11	22	30	51
130100032	G 3/4	12	32	35	81
130100034	G 1	13	40	43	175
130100043	G 1 1/4	15	50	53	430
130100005	M10X1	7	14	22	10
130100006	M10X1C	7	14	22	10,2
130100007	M12X1,5	9	17	29	21,5
130100008	M14X1,5	9	17	29	23
130100010	M16X1,5	9	22	28	36
130100011	M18X1,5	9	22	28	40
130100012	M20X1,5	10	24	32	64
130100014	M22X1,5	10	27	30	72
130100017	M24X2	11	30	33	120

Athena S.p.A. reserves the right to change dimensions listed on out technical tables, without notice