33A.I

Breather plug inner valve version made of stainless steel

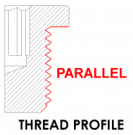

BODY MATERIAL Stainless steel
(1) PROTECTION CAP Stainless steel
(2) SPRING Stainless steel
(3) SEAL NBR
SET PRESSURE ~ 0,25 bar
RANGE TEMPERATURE -10 +80 [°C] ; +14 +194 [F]

DESCRIPTION

The breather plug is designed to mantain safe, equalized pressure in a unit even when it is under sudden chagnes in ambient temperature.This model has a valve inside. This system allows the expulsion of the exceeding air in the reservoir, thus re-establishing the pressure setting of the breather. In off-road application it decreases the risk of oil leakage from the unit.The cap protects from foreign bodies which may enter into the mechanical equipment and may cause damages.

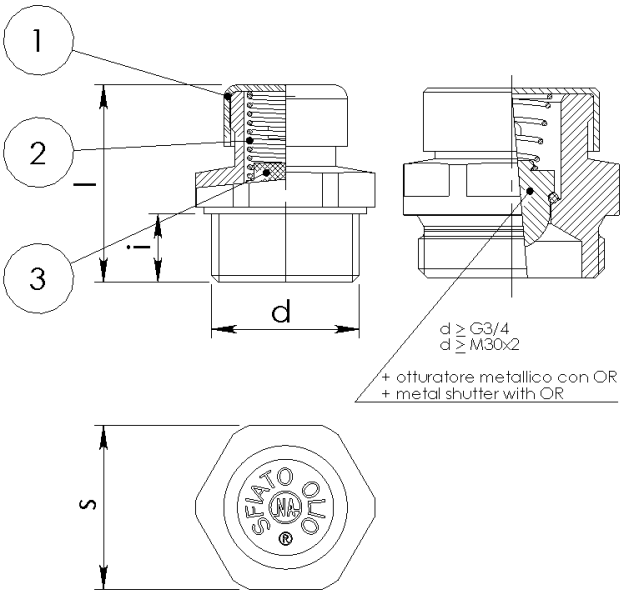

Article	d	i[mm]	s[mm]	l[mm]	weight[g]
130400440	G1/8	7	14	21,5	15
130400441	G1/4	9	17	29	29
130400442	G 3/8	9	20	28	40
130400443	G 1/2	10	24	29	63
130400389	G 3/4	16	29	39	111
130400390	G 1	16	36	42	255
130400393	G 2	20	60	60	935

Athena S.p.A. reserves the right to change dimensions listed on out technical tables, without notice