37M

Silencer plastic polietilene

BODY MATERIAL Nylon 6
(1) FILTER HDPE

DESCRIPTION
Pneumatic silencer for curbing noise in pneumatic plants and in automatic machinery in general.

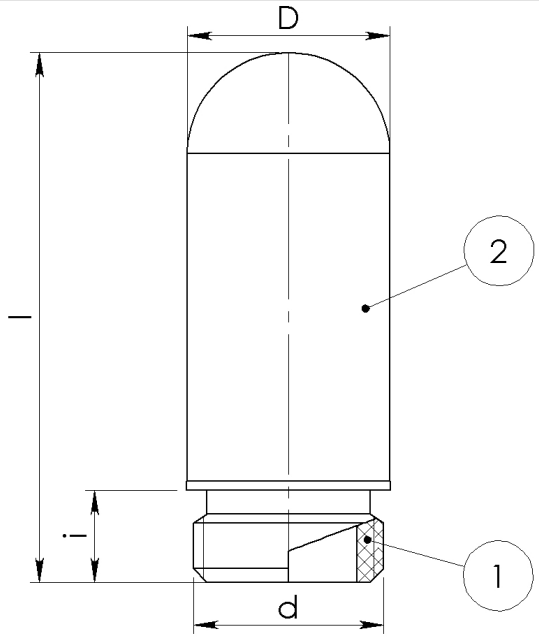

Article	d	i[mm]	l[mm]
410400040	M5	4	24,5
410400041	G1/8	7	32,5
410400042	G1/4	7,5	39
410400043	G 3/8	11	65
410400044	G 1/2	11	71
410400045	G 3/4	15,5	138
410400046	G 1	18	156

Athena S.p.A. reserves the right to change dimensions listed on out technical tables, without notice